HIKVISION

DS-2CD5A26G0-IZ(H)S
2 MP VF Bullet Network Camera

DarkFighter

H.265 | smart 60FPS | IP67 | Motorized | WDR | 3D DNR

- 1/1.8” Progressive Scan CMOS
- 1920 × 1080 @ 60fps
- 2.8 to 12 mm/8 to 32 mm motor-driven lens
- Color: 0.002 Lux @ (F1.2, AGC ON)
- H.265, H.265+, H.264, H.264+
- 140dB WDR
- 3D DNR
- 2.8 to 12 mm lens: IR range up to 50 m, 8 to 32 mm lens: IR range up to 100 m
- Five defined streams and up to five custom streams
- 6 behavior analyses, 2 exception detection, and face detection
- Built-in microSD/SDHC/SDXC card slot, up to 256 GB
- Alarm I/O
- IP67, IK10

Specifications

Camera	
Image Sensor	1/1.8" Progressive Scan CMOS
Min. Illumination	Color: 0.002 Lux @ (F1.2, AGC ON), 0 Lux with IR
Shutter Speed	1 s to 1/100,000 s
Slow Shutter	Yes
Day & Night	IR Cut Filter
Digital Noise Reduction	3D DNR
WDR	140 dB
Angle Adjustment	Bracket, pan: 0° to 355°, tilt: 0° to 90°, rotate: 0° to 360°
Lens	
Focal length	2.8 to 12 mm/8 to 32 mm
Aperture	2.8 to 12 mm lens: F1.2 8 to 32 mm lens: F1.6
Focus	Auto, semi-auto, manual
FOV	2.8 to 12 mm, horizontal FOV 103.3° to 38.6°, vertical FOV 54.2° to 21.9°, diagonal FOV 124.2° to 44.3° 8 to 32 mm, horizontal FOV 42.5° to 13.4°, vertical FOV 23.4° to 7.7°, diagonal FOV 49° to 15.3°
Lens Mount	Integrated
IR	
IR Range	2.8 to 12 mm lens: up to 50 m 8 to 32 mm lens: 100 m
Wavelength	850 nm
Compression Standard	
Video Compression	Main stream: H.265/H.264/H.265+/H.264+ Sub stream/third stream/fourth stream/fifth stream/custom stream: H.265/H.264/MJPEG
H.264 Type	Baseline Profile/Main Profile/High Profile
H.264+	Main stream supports
H.265 Type	Main Profile
H.265+	Main stream supports
Video Bit Rate	32 Kbps to 16 Mbps
Audio Compression	No
Audio Bit Rate	No
Smart Feature-set	
Behavior Analysis	Line crossing detection, intrusion detection, region entrance detection, region exiting detection, unattended baggage detection, object removal detection
Exception Detection	Scene change detection, defocus detection
Statistics	Counting
Face Detection	Yes
Region of Interest	4 fixed regions for main stream, sub stream, third stream, fourth stream, and fifth stream, and dynamic face tracking
Image	
Max. Resolution	1920 × 1080
Main Stream	50Hz: 50fps (1920 × 1080, 1280 × 960, 1280 × 720) 60Hz: 60fps (1920 × 1080, 1280 × 960, 1280 × 720)

Sub Stream	50Hz: 25fps (704 × 576, 640 × 480) 60Hz: 30fps (704 × 480, 640 × 480)
Third Stream	50Hz: 25fps (1920 × 1080, 1280 × 960, 1280 × 720, 704 × 576, 640 × 480) 60Hz: 30fps (1920 × 1080, 1280 × 960, 1280 × 720, 704 × 480, 640 × 480)
Fourth Stream	50Hz: 25fps (1920 × 1080, 1280 × 720, 704 × 576, 640 × 480) 60Hz: 30fps (1920 × 1080, 1280 × 720, 704 × 480, 640 × 480)
Fifth Stream	50Hz: 25fps (704 × 576, 640 × 480) 60Hz: 30fps (704 × 480, 640 × 480)
Custom Stream	50Hz: 25fps (1920 × 1080, 1280 × 720, 704 × 576, 640 × 480) 60Hz: 30fps (1920 × 1080, 1280 × 720, 704 × 480, 640 × 480) Up to five custom streams are supported
Image Enhancement	BLC, HLC, 3D DNR, Defog, EIS
Image Setting	Rotate mode, saturation, brightness, contrast, sharpness, AGC, and white balance are adjustable by client software or web browser
Target Cropping	Yes
SVC	H.264 and H.265 encoding
Day/Night Switch	Day/Night/Auto/Schedule/Triggered by Alarm In
Picture Overlay	LOGO picture can be overlaid on video with 128 × 128 24bit bmp format
Network	
Network Storage	microSD/SDHC/SDXC card (256 GB), local storage and NAS (NFS,SMB/CIFS), ANR
Alarm Trigger	Motion detection, video tampering alarm, network disconnected, IP address conflict, illegal login, HDD full, HDD error
Protocols	TCP/IP, ICMP, HTTP, HTTPS, FTP, DHCP, DNS, DDNS, RTP, RTSP, RTCP, PPPoE, NTP, UPnP, SMTP, SNMP, IGMP, 802.1X, QoS, IPv6, UDP, Bonjour
Security Measures	Password protection, HTTPS encryption, IEEE 802.1x port-based network access control, IP address filter, basic and digest authentication for HTTP/HTTPS, WSSE and digest authentication for ONVIF
General Function	One-key reset, anti-flicker, 5 streams and up to 5 custom streams, heartbeat, password protection, privacy mask, watermark, IP address filter
API	ONVIF (PROFILE S, PROFILE G), ISAPI, SDK
Simultaneous Live View	Up to 20 channels
User/Host	Up to 32 users. 3 user levels: administrator, operator and user
Client	iVMS-4200, Hik-Connect, iVMS-5200, Hik-Central
Web Browser	Plug-in required live view: IE8-11, Chrome 41-44, Mozilla Firefox30.0-51, Safari8.0+ Plug-in free live view: Chrome 45+, Mozilla Firefox52+
Interface	
Audio	No
Communication Interface	1 RJ45 10M/100M/1000M Ethernet port
Alarm	2 inputs, 2 outputs (up to 24 VDC 1A or 110 VAC 500 mA)
Video Output	1 BNC: CVBS analog output (4CIF resolution), internal 1Vp-p composite output (75 Ω/CVBS)
On-board storage	Built-in micro SD/SDHC/SDXC slot, up to 256 GB
Reset Button	Yes
Audio	
Environment Noise Filtering	No
Audio Sampling Rate	No
General	
Firmware Version	5.5.80

Operating Conditions	-30 °C to 65 °C (-22 °F to 149 °F), -H: -40 °C to 65 °C (-40 °F to 149 °F) Humidity 95% or less (non-condensing)
Power Supply	12 VDC ± 20%, two-core terminal block PoE (802.3at, class 4)
Power Consumption and Current	-IZS: 12 VDC, 1.0 A, max. 12 W; PoE (802.3at, 42.5 V to 57 V), 0.3 A to 0.2 A -IZHS: 12 VDC, 1.3 A, max. 15 W; PoE (802.3at, 42.5 V to 57 V), 0.4 A to 0.3 A
Protection Level	IP67, IK10
Heater	-H: yes
Material	Aluminum alloy
Dimensions	Camera: Φ144 × 347 mm (Φ5.7" × 13.7") With package: 405 × 190 × 180 mm (15.9" × 7.5" × 7.1")
Weight	Camera: approx. 2.45 kg (5.40 lb.) With package: approx. 2.7 kg (5.95 lb.)

** Listed resolutions are only selectable options. It does not mean that all streams can work at their maximum resolution at the same time.*

Available Model

DS-2CD5A26G0-IZS (2.8–12 mm), DS-2CD5A26G0-IZHS (2.8–12 mm)

DS-2CD5A26G0-IZS (8–32 mm), DS-2CD5A26G0-IZHS (8–32 mm)

**-H: Heater supported*

Dimension

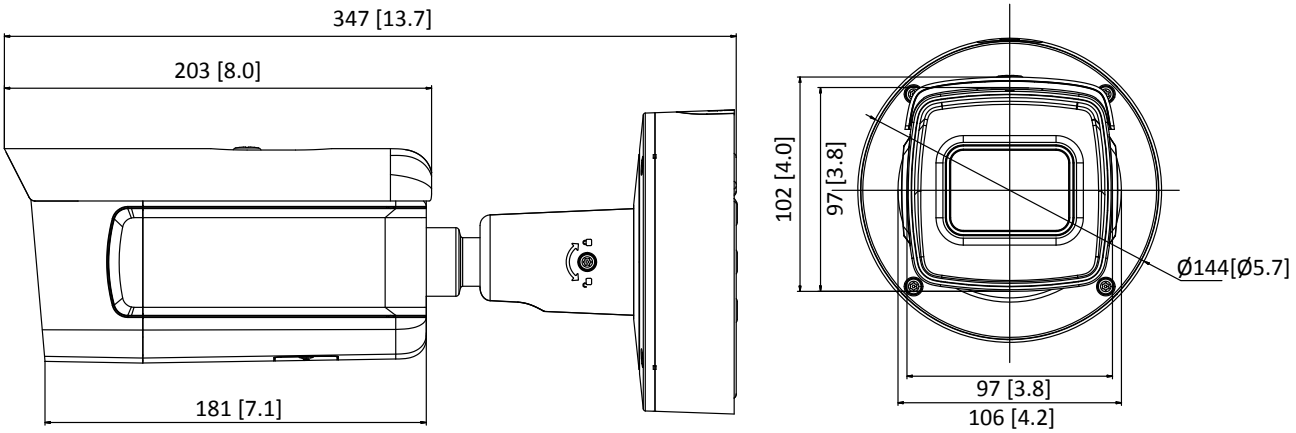

Unit: mm[inch]

Accessory

DS-1475ZJ-SUS

Vertical Pole Mount

DS-1476ZJ-SUS

Corner Mount

Distributed by

Headquarters
No.555 Qianmo Road, Binjiang District,
Hangzhou 310051, China
T +86-571-8807-5998
overseasbusiness@hikvision.com

Hikvision USA
T +1-909-895-0400
sales.usa@hikvision.com

Hikvision Europe
T +31-23-55-42-770
info.eu@hikvision.com

Hikvision Middle East
T +971-4-8816086
salesme@hikvision.com

Hikvision Russia
T +7-495-669-67-99
saleru@hikvision.com

Hikvision India
T +91-22-28469900
sales@pramahikvision.com

Hikvision Italy
T +39-0438-6902
info.it@hikvision.com

Hikvision France
T +33(0)1-85-330-450
info.fr@hikvision.com

Hikvision Spain
T +34-91-737-16-55
info.es@hikvision.com

Hikvision Poland
T +48-22-460-01-50
poland@hikvision.com

Hikvision UK
T +01628-902140
support.uk@hikvision.com

Hikvision Singapore
T +65-6684-4718
sg@hikvision.com

Hikvision Oceania
T +61-2-8599-4233
salesau@hikvision.com

Hikvision Canada
T +1-909-895-0400
sales.usa@hikvision.com

Hikvision Korea
T +82-31-731-8841
sales.korea@hikvision.com

Hikvision Brazil
T +55 11 3318-0050
Latam.support@hikvision.com

Hikvision Africa
T +27 (10) 0351172
sale.africa@hikvision.com

Hikvision Hong Kong
T +852-2151-1761

© Hikvision Digital Technology Co., Ltd. 2017 | Data subject to change without notice | 20180912