DS-2CD2123G0-I(S)
2 MP IR Fixed Dome Network Camera

Key Features

- 1/2.8" Progressive Scan CMOS
- 1920 × 1080@30fps
- 2.8/4/6/8 mm fixed lens
- Color: 0.01 Lux @ (F1.2, AGC ON), 0.028 Lux @ (F2.0, AGC ON), 0 Lux with IR
- H.265+, H.265, H.264+, H.264
- Three streams
- 120dB WDR
- 2 Behavior analyses, and face detection
- BLC/3D DNR/ROI
- IP67, IK10
- Built-in micro SD/SDHC/SDXC card slot, up to 128 GB
- 3-Axis adjustment

Specifications

Camera	
Image Sensor	1/2.8" Progressive Scan CMOS
Min. Illumination	Color: 0.01 Lux @ (F1.2, AGC ON), 0.028 Lux @ (F2.0, AGC ON), 0 Lux with IR
Shutter Speed	1/3 s to 1/100,000 s
Slow Shutter	Yes
Auto-Iris	No
Day & Night	IR Cut Filter
Digital Noise Reduction	3D DNR
WDR	120dB
3-Axis Adjustment	Pan: 0° to 355°, tilt: 0° to 75°, rotate: 0° to 355°
Lens	
Focal length	2.8/4/6/8 mm
Aperture	F2.0
Focus	Manual
FOV	2.8 mm: horizontal FOV: 114°, vertical FOV: 62°, diagonal FOV: 135° 4 mm: horizontal FOV: 86°, vertical FOV: 46°, diagonal FOV: 102° 6 mm: horizontal FOV: 54°, vertical FOV: 30°, diagonal FOV: 62° 8 mm: horizontal FOV: 43°, vertical FOV: 23°, diagonal FOV: 50°
Lens Mount	M12
IR	
IR Range	Up to 30 m
Wavelength	850nm
Compression Standard	
Video Compression	Main stream: H.265/H.264 Sub-stream: H.265/H.264/MJPEG Third stream: H.265/H.264
H.264 Type	Main Profile/High Profile
H.264+	Main stream and sub-stream support
H.265 Type	Main Profile
H.265+	Main stream and sub-stream support
Video Bit Rate	32 Kbps to 16 Mbps
Audio Compression (-S)	G.711/G.722.1/G.726/MP2L2/PCM
Audio Bit Rate	64Kbps(G.711)/16Kbps(G.722.1)/16Kbps(G.726)/32-192Kbps(MP2L2)
Smart Feature-set	
Behavior Analysis	Line crossing detection, intrusion detection
Face Detection	Yes
Region of Interest	1 fixed region for main stream and sub-stream
Image	
Max. Resolution	1920 × 1080
Main Stream	50Hz: 25fps (1920 × 1080, 1280 × 960, 1280 × 720) 60Hz: 30fps (1920 × 1080, 1280 × 960, 1280 × 720)
Sub-Stream	50Hz: 25fps (640 × 480, 640 × 360, 320 × 240) 60Hz: 30fps (640 × 480, 640 × 360, 320 × 240)

Third Stream	50Hz: 25fps (1920 × 1080, 1280 × 720, 640 × 360, 352 × 288) 60Hz: 30fps (1920 × 1080, 1280 × 720, 640 × 360, 352 × 240)
Image Enhancement	BLC/3D DNR
Image Setting	Rotate mode, saturation, brightness, contrast, sharpness adjustable by client software or web browser
Target Cropping	No
Day/Night Switch	Auto/Schedule/Triggered by alarm in (-S)
Network	
Network Storage	Support Micro SD/SDHC/SDXC card (128G), local storage and NAS (NFS,SMB/CIFS), ANR
Alarm Trigger	Motion detection, video tampering, network disconnected, IP address conflict, illegal login, HDD full, HDD error
Protocols	TCP/IP, ICMP, HTTP, HTTPS, FTP, DHCP, DNS, DDNS, RTP, RTSP, RTCP, PPPoE, NTP, UPnP™, SMTP, SNMP, IGMP, 802.1X, QoS, IPv6, Bonjour
General Function	One-key reset, anti-flicker, three streams, heartbeat, mirror, password protection, privacy mask, watermark, IP address filter
Firmware Version	V5.5.2
API	ONVIF (PROFILE S, PROFILE G), ISAPI
Simultaneous Live View	Up to 6 channels
User/Host	Up to 32 users 3 levels: Administrator, Operator and User
Client	iVMS-4200, Hik-Connect, iVMS-5200
Web Browser	IE8+, Chrome 31.0-44, Firefox 30.0-51, Safari 8.0+
Interface	
Audio (-S)	1 input (line in/mic.in), 1 output (line out), terminal block, mono sound
Communication Interface	1 RJ45 10M/100M self-adaptive Ethernet port
Alarm (-S)	1 input, 1 output (up to 12 VDC, 30 mA), terminal block
Video Output	No
On-board storage	Built-in Micro SD/SDHC/SDXC slot, up to 128 GB
SVC	H.264 and H.265 encoding
Reset Button	Yes
Audio (-S)	
Environment Noise Filtering	Yes
Audio Sampling Rate	16 kHz/32 kHz/44.1 kHz/48 kHz
General	
Operating Conditions	-30 °C to +60 °C (-22 °F to +140 °F), Humidity 95% or less (non-condensing)
Power Supply	12 VDC ± 25%, Φ 5.5 mm coaxial power plug PoE (802.3af, class 3)
Power Consumption and Current	12 VDC, 0.5A, max. 6W PoE (802.3af, 37V to 57V), 0.2A to 0.1A, max. 7.5W
Protection Level	IP67, IK10 TVS 2000V Lightning Protection, Surge Protection and Voltage Transient Protection
Material	Metal
Dimensions	Camera: Φ 111 × 82.4 mm (Φ 4.4" × 3.2") Package: 134 × 134 × 108 mm (5.3" × 5.3" × 4.3")
Weight	Camera: Approx. 610 g (1.3 lb.) With Package: Approx. 820 g (1.8 lb.)

Available Model:

DS-2CD2123G0-I (2.8/4/6/8 mm), DS-2CD2123G0-IS (2.8/4/6/8 mm)

Dimensions

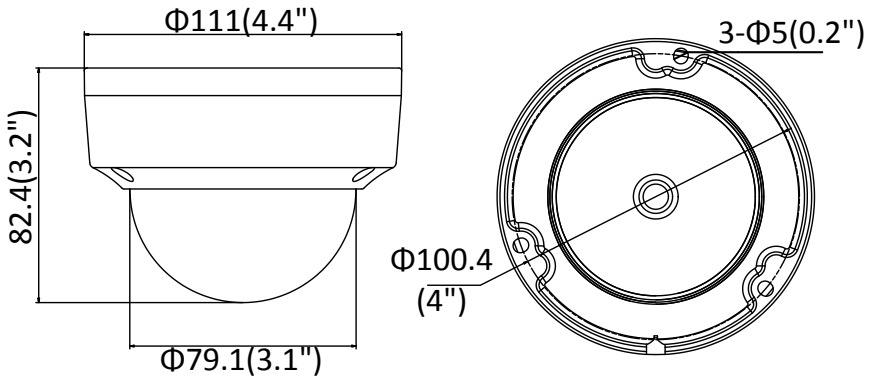

Unit: mm

Accessories

Inclined ceiling mount

DS-1259ZJ

Wall mount

DS-1272ZJ-110

Wall mount + Junction Box

DS-1272ZJ-110B

Pendant mount

DS-1271ZJ-110

Junction Box

DS-1280ZJ-DM18

Corner mount

DS-1276ZJ

Vertical Pole mount

DS-1275ZJ

Rain-proof Cap

DS-1250ZJ

Distributed by

Headquarters
No.555 Qianmo Road, Binjiang District,
Hangzhou 310051, China
T +86-571-8807-5998
overseasbusiness@hikvision.com

Hikvision USA
T +1-909-895-0400
sales.usa@hikvision.com

Hikvision Europe
T +31-23-55-42-770
info.eu@hikvision.com

Hikvision Middle East
T +971-4-8816086
salesme@hikvision.com

Hikvision Russia
T +7-495-669-67-99
saleru@hikvision.com

Hikvision India
T +91-22-28469900
sales@pramahikvision.com

Hikvision Italy
T +39-0438-6902
info.it@hikvision.com

Hikvision France
T +33(0)1-85-330-450
info.fr@hikvision.com

Hikvision Spain
T +34-91-737-16-55
info.es@hikvision.com

Hikvision Poland
T +48-22-460-01-50
poland@hikvision.com

Hikvision UK
T +01628-902140
support.uk@hikvision.com

Hikvision Singapore
T +65-6684-4718
sg@hikvision.com

Hikvision Oceania
T +61-2-8599-4233
salesau@hikvision.com

Hikvision Canada
T +1-909-895-0400
sales.usa@hikvision.com

Hikvision Korea
T +82-31-731-8841
sales.korea@hikvision.com

Hikvision Brazil
T +55 11 3318-0050
Latam.support@hikvision.com

Hikvision Africa
T +27 (10) 0351172
sale.africa@hikvision.com

Hikvision Hong Kong
T +852-2151-1761

© Hikvision Digital Technology Co., Ltd. 2017 | Data subject to change without notice | **05050220171019**