DS-2CD2T45FWD-I5/I8
4 MP IR Fixed Bullet Network Camera

Key Features

- 1/2.5" Progressive Scan CMOS
- 2688 × 1520 @30 fps
- 2.8, 4, 6, 8, 12 mm fixed lens
- H.265+, H.265, H.264+, H.264
- 4 Behavior analyses
- 120dB WDR
- Powered by Darkfighter
- IR range: 50 m, 80 m, optional
- BLC/3D DNR/ROI/HLC
- IP67
- Built-in microSD/SDHC/SDXC card slot, up to 128 GB
- Color: 0.008 lux @(F1.2, AGC ON), 0.014 lux @(F1.6, AGC ON), 0 lux with IR

Specifications

Camera	
Image Sensor	1/2.5" Progressive Scan CMOS
Min. Illumination	Color: 0.008 lux @(F1.2, AGC ON), 0.014 lux @(F1.6, AGC ON), 0 lux with IR
Shutter Speed	1/3 s to 1/100,000 s
Slow Shutter	Yes
Day & Night	IR Cut Filter
Digital Noise Reduction	3D DNR
WDR	120dB
3-Axis Adjustment	Pan: 0° to 360°, tilt: 0° to 100°, rotate: 0° to 360°
Lens	
Focal Length	2.8, 4, 6, 8, 12 mm
Aperture	F1.6
Focus	Fixed
FOV	2.8 mm, horizontal FOV: 109°, vertical FOV: 60°, diagonal FOV: 131° 4 mm, horizontal FOV: 88°, vertical FOV: 46°, diagonal FOV: 105° 6 mm, horizontal FOV: 53°, vertical FOV: 30°, diagonal FOV: 61° 8 mm, horizontal FOV: 41°, vertical FOV: 23°, diagonal FOV: 48° 12 mm, horizontal FOV: 25°, vertical FOV: 14°, diagonal FOV: 29°
Lens Mount	M12
IR	
IR Range	I5: Up to 50 m I8: Up to 80 m
Wavelength	850nm
Compression Standard	
Video Compression	Main stream: H.265/H.264 Sub-stream: H.265/H.264/MJPEG Third stream: H.265/H.264
H.264 Type	Main Profile/High Profile
H.264+	Main stream supports
H.265 Type	Main Profile
H.265+	Main stream supports
Video Bit Rate	32 Kbps to 16 Mbps
Smart Feature-set	
Behavior Analysis	Line crossing detection, intrusion detection, object removal detection, unattended baggage detection
Exception Detection	Scene change detection
Face Detection	Yes
Region of Interest	Support 1 fixed region for main stream and sub-stream
Image	
Max. Resolution	2688 × 1520
Main Stream	50Hz: 25 fps (2688 × 1520, 2304 × 1296, 1920 × 1080) 60Hz: 30 fps (2688 × 1520, 2304 × 1296, 1920 × 1080)
Sub-Stream	50Hz: 25 fps (640 × 480, 640 × 360, 320 × 240) 60Hz: 30 fps (640 × 480, 640 × 360, 320 × 240)
Third Stream	50Hz: 25 fps (1280 × 720, 640 × 360, 352 × 288)

	60Hz: 30 fps (1280 × 720, 640 × 360, 352 × 240)
Image Enhancement	BLC/3D DNR/HLC
Image Settings	Rotate mode, saturation, brightness, contrast, sharpness and white balance adjustable by client software or web browser
Target Cropping	No
SVC	H.264 and H.265 encoding support
Day/Night Switch	Day/Night/Auto/Schedule
Network	
Network Storage	Support microSD/SDHC/SDXC card (128G), local storage and NAS (NFS,SMB/CIFS), ANR
Alarm Trigger	Motion detection, video tampering, network disconnected, IP address conflict, illegal login, HDD full, HDD error
Protocols	TCP/IP, ICMP, HTTP, HTTPS, FTP, DHCP, DNS, DDNS, RTP, RTSP, RTCP, PPPoE, NTP, UPnP, SMTP, SNMP, IGMP, 802.1X, QoS, IPv6, Bonjour
General Function	One-key reset, anti-flicker, three streams, heartbeat, mirror, password protection, privacy mask, watermark, IP address filter
Firmware Version	V5.5.80
API	ONVIF (PROFILE S, PROFILE G), ISAPI
Simultaneous Live View	Up to 6 channels
User/Host	Up to 32 users 3 levels: Administrator, Operator and User
Client	iVMS-4200, Hik-Connect, iVMS-5200, iVMS-4500
Web Browser	Plug-in required live view: IE8+, Chrome 41.0-44, Firefox 30.0-51, Safari 8.0-11 Plug-in free live view: Chrome 45.0+, Firefox 52.0+
Interface	
Communication Interface	1 RJ45 10M/100M self-adaptive Ethernet port
On-board storage	Built-in microSD/SDHC/SDXC slot, up to 128 GB
Reset Button	Yes
General	
Operating Conditions	-30 °C to +60 °C (-22 °F to +140 °F), humidity 95% or less (non-condensing)
Power Supply	12 VDC ± 25%, Φ 5.5 mm coaxial plug power PoE(802.3af, class 3)
Power Consumption and Current	I5: 12 VDC, 0.7 A, max. 7.5 W PoE (802.3af, 36V to 57V), 0.3 A to 0.1 A, max. 9.5 W I8: 12 VDC, 1 A, max: 11.5 W PoE (802.3af, 36V to 57V), 0.4 A to 0.2 A, max. 12.9 W
Protection Level	IP67
Material	Metal
Dimensions	Camera: Φ104.8 mm × 299.7 mm (Φ4.1" × 11.8") Package: 386 mm × 156 mm × 155 mm (15.2" × 6.1" × 6.1")
Weight	Camera: 1200 g (2.7 lb.)

Available Models

DS-2CD2T45FWD-I5(2.8/4/6/8/12 mm), DS-2CD2T45FWD-I8(2.8/4/6/8/12 mm)

Dimension

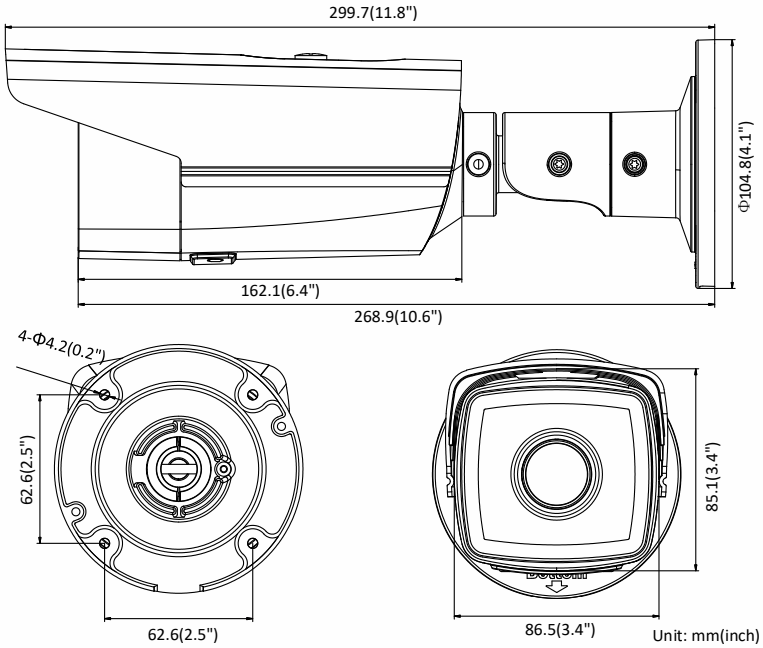

Accessory

DS-1260ZJ
Junction Box

DS-1275ZJ-S-SUS
Vertical Pole Mount

DS-1276ZJ-SUS
Corner Mount

Distributed by

DS-1275ZJ-SUS(Black)
Vertical Pole Mount

DS-1276ZJ-SUS(Black)
Corner Mount

DS-1260ZJ(Black)
Junction Box

Headquarters
No.555 Qianmo Road, Binjiang District,
Hangzhou 310051, China
T +86-571-8807-5998
overseasbusiness@hikvision.com

Hikvision USA
T +1-909-895-0400
sales.usa@hikvision.com

Hikvision Europe
T +31-23-55-42-770
info.eu@hikvision.com

Hikvision Middle East
T +971-4-8816086
salesme@hikvision.com

Hikvision Russia
T +7-495-669-67-99
saleru@hikvision.com

Hikvision India
T +91-22-28469900
sales@pramahikvision.com

Hikvision Italy
T +39-0438-6902
info.it@hikvision.com

Hikvision France
T +33(0)1-85-330-450
info.fr@hikvision.com

Hikvision Spain
T +34-91-737-16-55
info.es@hikvision.com

Hikvision Poland
T +48-22-460-01-50
poland@hikvision.com

Hikvision UK
T +01628-902140
support.uk@hikvision.com

Hikvision Singapore
T +65-6684-4718
sg@hikvision.com

Hikvision Oceania
T +61-2-8599-4233
salesau@hikvision.com

Hikvision Canada
T +1-909-895-0400
sales.usa@hikvision.com

Hikvision Korea
T +82-31-731-8841
sales.korea@hikvision.com

Hikvision Brazil
T +55 11 3318-0050
Latam.support@hikvision.com

Hikvision Africa
T +27 (10) 0351172
sale.africa@hikvision.com

Hikvision Hong Kong
T +852-2151-1761

© Hikvision Digital Technology Co., Ltd. 2019 | Data subject to change without notice |

05058020190507